TKR5147

Complete Center Differential (overview)

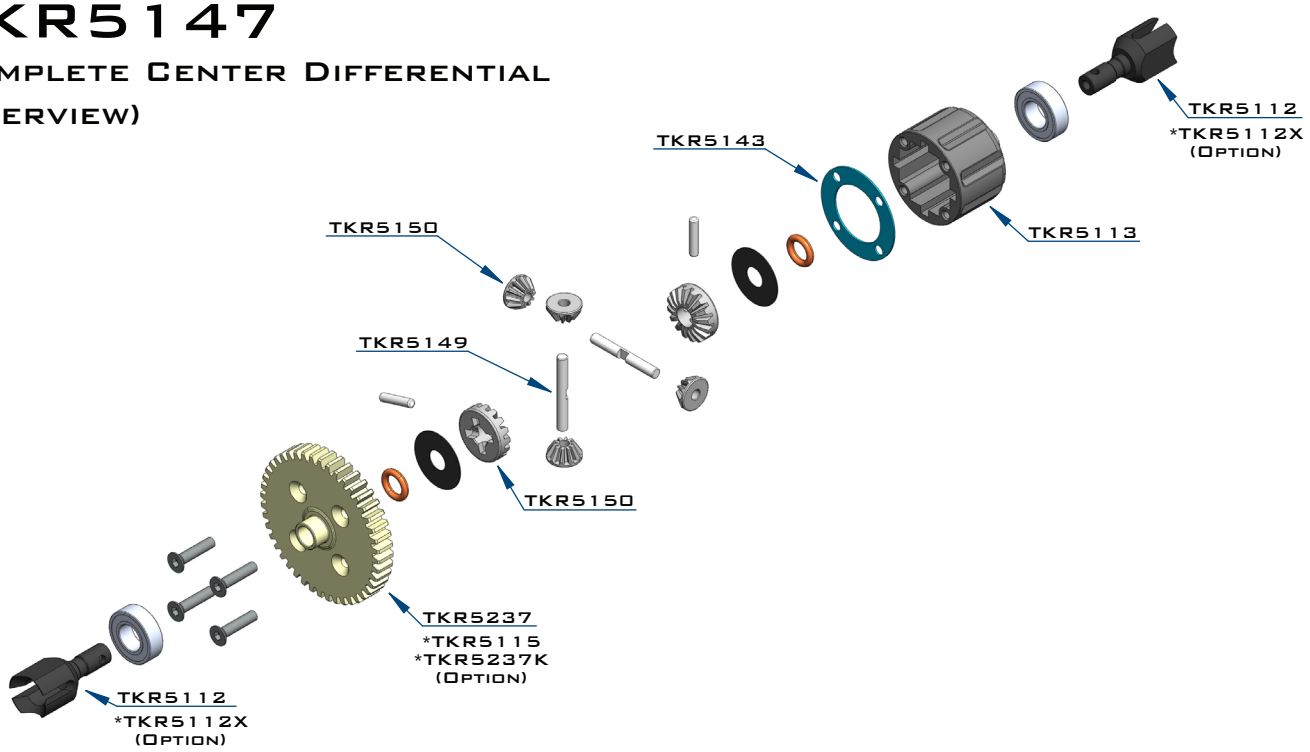

Step 1

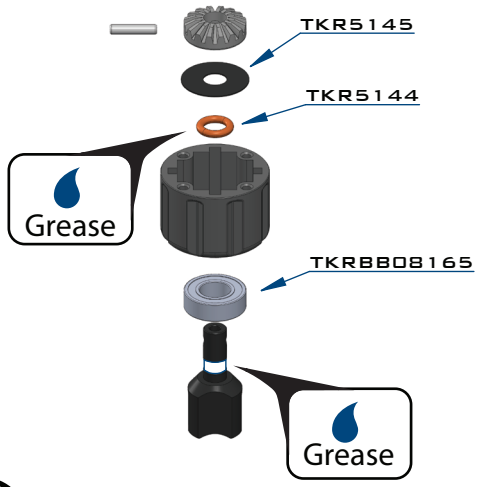

Step 2

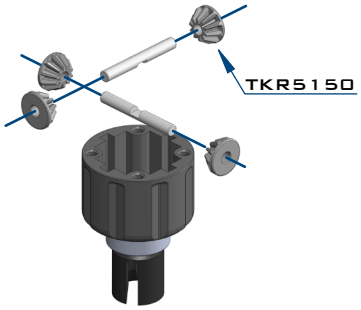

Step 3

Fill with oil to
the top of spider gears

Step 4

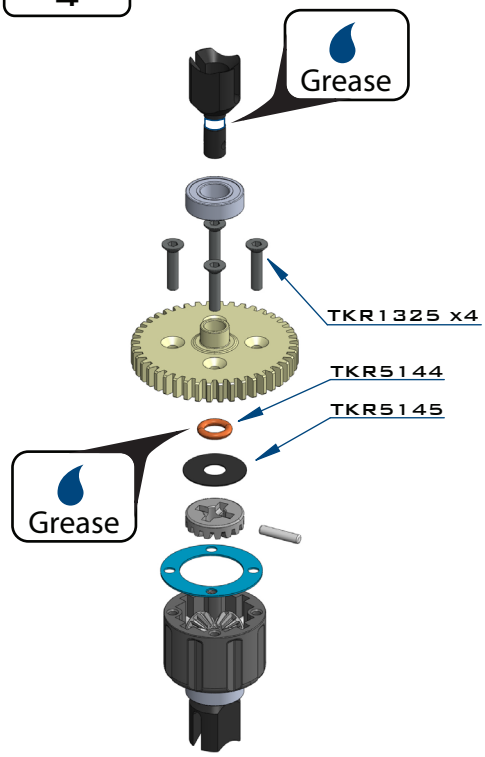

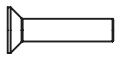

x4

TKR1325
M3x14mm Flat Head Screw

x2

TKR5144
Differential O-rings

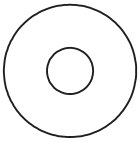

x2

TKR5145
Differential Shims (6x17mm)

x2

TKRBB08165
Ball Bearing(8x16x5mm)